SHIMANO

Saragosa S A-RB

SRG-8000SW

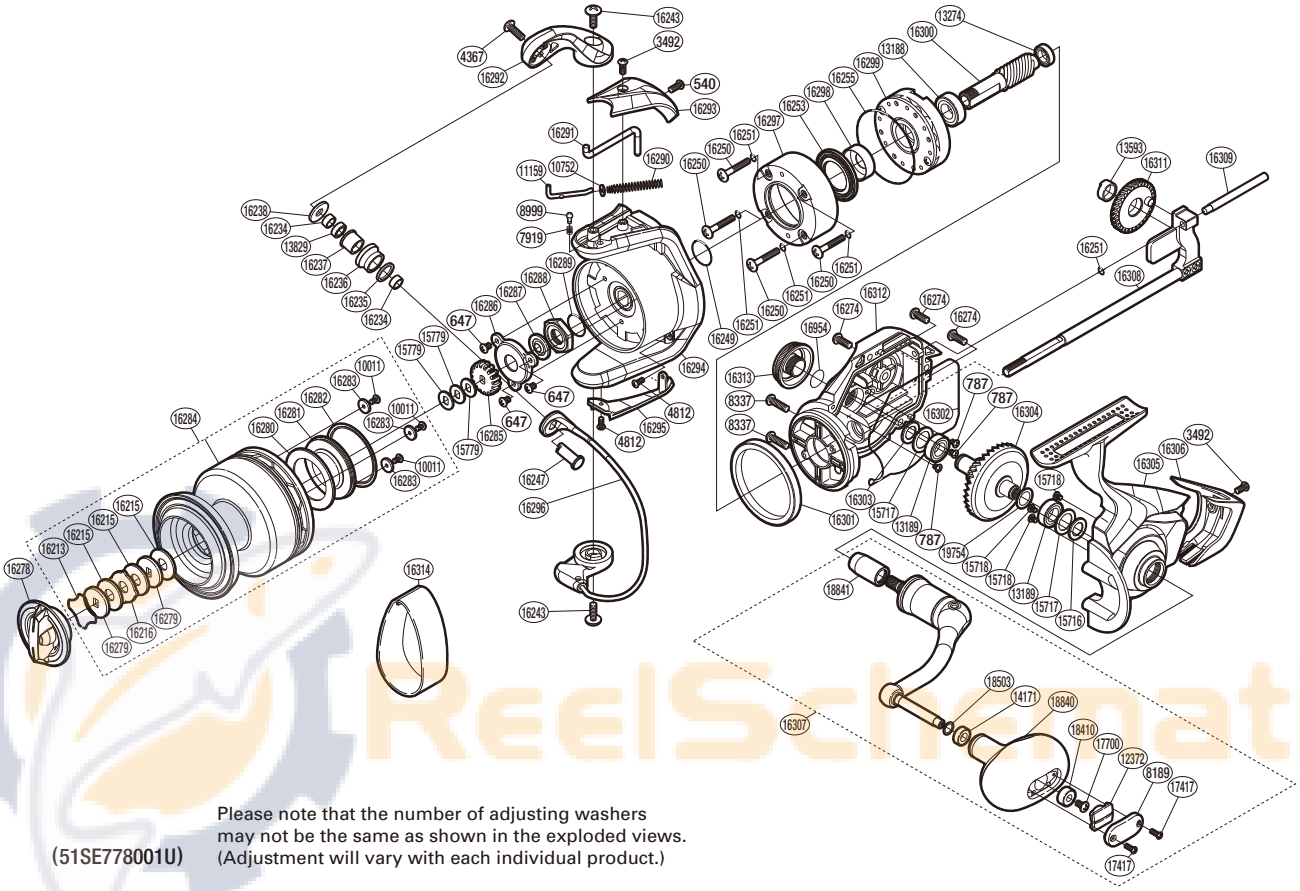

Please note that the number of adjusting washers may not be the same as shown in the exploded views. (Adjustment will vary with each individual product.)

(51SE778001U)

Part No.	Description	Part No.	Description	Part No.	Description
RD 0540	Screw	RD16236	Line Roller	RD16296	Bail Assembly
RD 0647	Screw	RD16237	Line Roller Bushing	RD16297	Roller Clutch Water Proof Cover
RD 0787	Screw	RD16238	Line Roller Washer	RD16298	Rotor Ring
RD 3492	Screw	RD16243	Screw	RD16299	Roller Clutch Assembly
RD 4367	Screw	RD16247	Line Roller Support	RD16300	Pinion Gear
RD 4812	Screw	RD16249	O Ring	RD16301	Friction Ring
RD 7919	Click Spring	RD16250	Screw	RD16302	Body Seal
RD 8189	Handle Knob I.D. Plate	RD16251	O Ring	RD16303	Bearing Water Proof
RD 8337	Screw	RD16253	Roller Clutch Water Proof	RD16304	Drive Gear
RD 8999	Click Pin	RD16255	O Ring	RD16305	Side Cover
RD10011	Screw	RD16274	Screw	RD16306	Rear Protector
RD10752	Spring Guide A Support	RD16278	Drag Knob	RD16307	Handle Assembly
RD11159	Bail Spring Guide A	RD16279	Key Washer	RD16308	Main Shaft Assembly
RD12372	Handle Knob Seal	RD16280	Drag Washer	RD16309	Oscillating Guide
RD13188	Ball Bearing	RD16281	Spool Drag Disk	RD16311	Oscillating Gear
RD13189	Ball Bearing	RD16282	Spool Drag Disk Seal	RD16312	Body
RD13274	Ball Bearing	RD16283	Washer	RD16313	Handle Screw Cap
RD13593	Oscillating Gear Bushing	RD16284	Spool Assembly	RD16954	O Ring
RD13829	Ball Bearing	RD16285	Spool Support	RD17417	Screw
RD14171	Handle Knob Bushing	RD16286	Nut Lock Plate	RD17700	Screw
RD15716	Bearing Water Proof	RD16287	Bearing Water Proof	RD18410	Handle Knob Bushing A
RD15717	Washer	RD16288	Rotor Nut	RD18503	Washer
RD15718	Screw	RD16289	O Ring	RD18840	Handle Knob Assembly
RD15779	Spool Washer	RD16290	Bail Spring	RD18841	Handle Shaft Cover B
RD16213	Drag Washers Retainer	RD16291	Bail Trip Lever	RD19754	Washer
RD16215	Drag Washer	RD16292	Bail Arm		
RD16216	Eared Washer	RD16293	Bail Spring Cover		
RD16234	Line Roller Collar	RD16294	Rotor		
RD16235	Line Roller Spacer	RD16295	Bail Hold Support Guard	RD16314	Line Band (accessory)